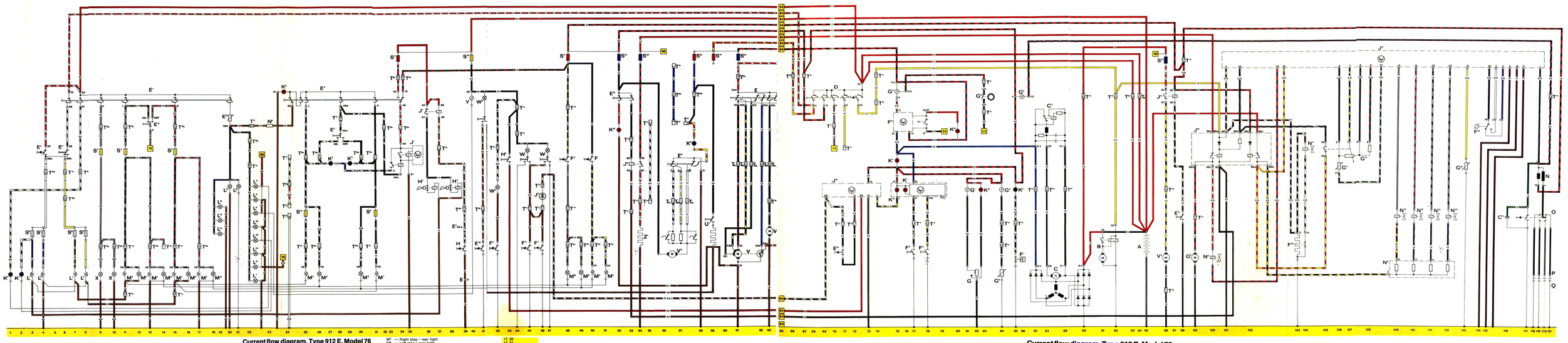

Current flow diagram, Type 912 E, Model 76

Description	Current track
E — Windshield wiper switch	30, 61, 62, 63
E^1 — Headlight switch	6, 8, 9, 11, 15, 20
E^2 — Turn signal switch	28
E^3 — Emergency flasher switch	24, 25, 26, 31, 34
E^4 — Dimmer switch	5, 39
E^5 — Headlight flasher switch	5
E^6 — Rear window wiper switch	57, 58
E^7 — Rear window defogger switch	52, 53
E^8 — Parking light switch	13
E^{9a} — Instrument illumination potentiometer	19
E^{9b} — Switch for glove compartment light	41
F — Stop light switch	50
F^1 — Left door switch	45
F^2 — Right door switch	46
F^3 — Left door lim switch	43
F^4 — Switch for luggage compartment light	42
H — Horn switch	39
H^1 — Horns	36, 38
H^2 — Key warning buzzer contact	33
J^1 — Turn signal/hazard signal flasher	33, 34, 35
J^2 — Horn relay	36, 37
J^3 — Rear window defogger relay	53, 54
J^4 — Diode for seat belt warning system	40
K^1 — High beam indicator light	7
K^2 — Low fuel warning light	75
K^3 — Turn signal indicator light	27, 29
K^4 — Hazard flasher indicator light	24
K^5 — Blower indicator light	58
K^6 — Rear window defogger indicator light	52
L^1 — Sealed beam unit, left headlight	3, 7
L^2 — Sealed beam unit, right headlight	4, 8
L^3 — Speedometer illumination light	22
L^4 — Tachometer illumination light	22
L^5 — Clock illumination light	22
L^{7a} — Ashtray illumination light	20
L^8 — Heater control assembly illumination light	19
L^{9a} — Temperature control lever illumination light	21
L^{9b} — Cigarette lighter illumination light	22
L^{9c} — Tachometer illumination light	22
L^{9d} — Oil pressure indicator illumination light	22
M^1 — Right stop / rear light	17, 50
M^2 — Left stop / rear light	13, 51
M^3 — Left front turn signal / parking light	11, 26
M^4 — Left rear turn signal	31
M^5 — Right front turn signal / parking light	15, 31
M^6 — Right rear turn signal	30
M^{11} — Front side marker light	12, 16
M^{12} — Rear side marker light	14, 18
M^{13} — Left back-up light	48
M^{14} — Right back-up light	49
M^{15} — Reflector	23
S^2 — Fuses	9, 15, 11, 8, 7, 4, 3, 31, 20, 49
S^{10} — the	52, 61, 59, 58
S^{11} — fuse	34
S^{12} — Fuse	54
S^{14} — Fuse on the rear fuse box	54
T^1 — Cable connector, single	
a — near regulator panel	14, 53, 54, 55
b — behind sealed beam unit, left	11, 25
c — behind sealed beam unit, right	15, 31
d — behind fuse box	20, 49
e — on luggage compartment floor	22, 42, 44, 45, 46, 56
f — behind instrument panel	6, 22, 24, 28, 55, 56, 57
h — near left rear lights	24
T^2 — Cable connector, sixfold	
a — in engine compartment, rear left	9, 13, 24, 26, 48, 51
b — in engine compartment, rear right	10, 17, 30, 49, 50
c — below instrument panel	41, 62, 63
d — below instrument panel	4, 8, 28, 30, 39
e — below instrument panel	25, 31, 32, 34
g — below instrument panel	6, 9, 11, 15, 22
h — below instrument panel	42, 56, 57, 58
T^4 — Cable connector, fourteenfold on regulator panel	45, 46
U^1 — Cigar lighter	59
V — Windshield wiper motor	61, 62
V^2 — Blower motor	56, 57
V^4 — Washer pump	63
W — Interior light	45, 47
W^1 — Glove compartment light	41
W^2 — Glove compartment light	41
X — License plate light	9, 10
Y — Clock	40
Z^1 — Rear window defogger	54

Current flow diagram, Type 912 E, Model 76

Description	Current track
A — Battery	95
B — Starter	91, 92
C — Generator	87, 88, 89, 90
C^2 — Voltage regulator	87, 88, 89
C^4 — Ignition condenser	116
D — Ignition / starter switch	68, 69, 70, 71, 72
E^{14} — Heater blower switch	98
E^{24} — Left seat belt switch	71
F^1 — Oil pressure switch	85
F^4 — Brake warning switch	77
F^8 — Parking brake switch	78
F^{28} — Throttle valve switch	115
F^{34} — Thermo — switch for cold start valve	103, 104
F^{37} — Mileage counter switch (EGR)	75, 76, 78
G — Fuel sender unit	82
G^1 — Fuel gauge	81
G^3 — Tachometer	86
G^4 — Fuel pump	99
G^5 — Oil temperature sender unit	84
G^6 — Oil temperature indicator	84
G^{12} — Temperature sensor I	106
G^{14} — Temperature sensor II	113
G^{18} — Air flow meter	106, 107, 108
G^{21} — Speedometer	75
G^{22} — Speedometer sensor	83
J^{14} — Relay for heater blower	96, 97
J^{31} — Electronic fuel injection unit	101—118
J^{34} — Seat belt warning system relay with integrated buzzer	69, 72, 74
J^{40} — Double relay	99, 100, 101, 102
K^2 — Generator charge indicator light	75
K^3 — Oil pressure indicator light	85
K^7 — Parking brake / brake warning indicator light	76
K^{10} — Low fuel warning light	83
K^{16} — Seat belt warning light	75
K^{20} — EGR warning light	80
N — Ignition coil	118
N^1 — Resistor	109, 110, 111, 112
N^{11} — Cold start valve	104
N^{16} — Injection valves cyl. 1 and 4	109, 110
N^{20} — Injection valves cyl. 2 and 3	111, 112
N^{31} — Supplementary air valve	100
O — Distributor	117, 119, 120
P — Spark plug connector	118, 119, 120, 121
Q — Spark plug	118, 119, 120, 121
S^{20} — Fuse on rear fuse box	96
T^1 — Cable connector, single	
a — near regulator panel	96, 99
e — on luggage compartment floor	74
f — behind instrument panel	70, 71, 77, 78
T^2 — Cable connector, double	
c — near left seat	71, 72
d — in engine compartment	96
i — in tunnel, rear	83
T^6 — Cable connector, sixfold below instrument panel	66, 67, 74, 93, 94
T^{14} — Cable connector, fourteenfold on regulator panel	84, 85, 87, 88, 89, 90, 92, 96, 120
V^4 — Heater blower	96